AIR KNIVES

Description of the set-up and instrumentation used for our tests on air knives.

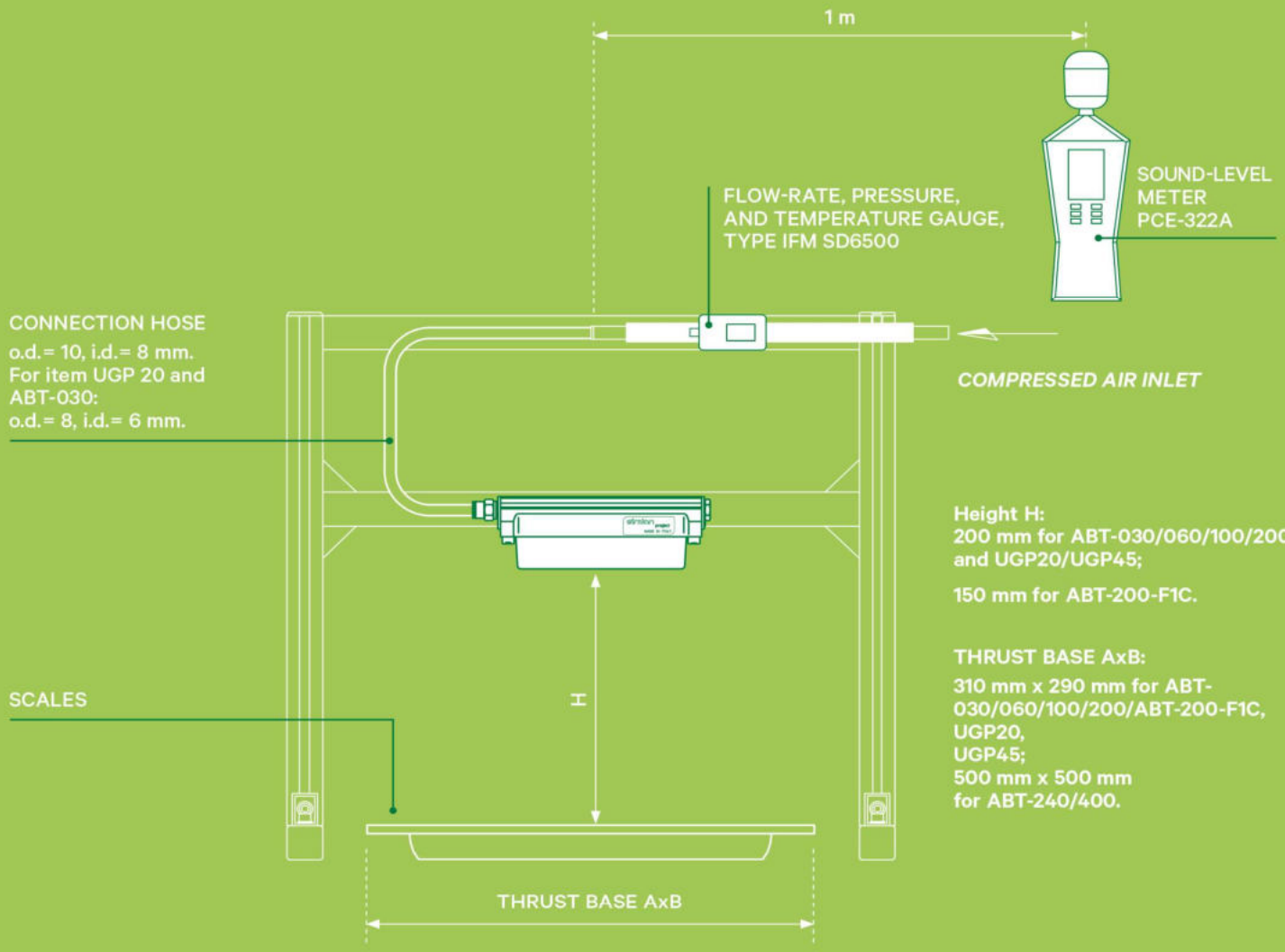

Height H:
200 mm for ABT-030/060/100/200 and UGP20/UGP45;

150 mm for ABT-200-F1C.

THRUST BASE AxB:

310 mm x 290 mm for ABT-030/060/100/200/ABT-200-F1C, UGP20, UGP45;
500 mm x 500 mm for ABT-240/400.

PRIMAIRO
Primairo GmbH
Nobelstraße 3
41189 Mönchengladbach
Deutschland
T +49 2166 989 75 00
F +49 2166 989 75 09
info@primairo.de
www.primairo.de

SERIES ABT / ABX

The air knives **SERIES ABT** are one of a kind, thanks to their high blowing power, which is a result of the air flow on both sides of the blade, and thanks to their easy installation, by means of two neodymium magnets and of brackets, which make it possible to direct the knife according to all demands. These products are very effective for cleaning, drying, and cooling.

- Design geometries optimised to maximise the Coanda effect
- Double blow-off flow (both sides of the blade)
- Powerful, uniform flow, suitable for cleaning small and large surfaces
- Modular design and possibility of customisation
- No moving parts, so maintenance-free

PRIMAIRO
Primairo GmbH
Nobelstraße 3
41189 Mönchengladbach
Deutschland
T +49 2166 989 75 00
F +49 2166 989 75 09
info@primairo.de
www.primairo.de

COANDA-EFFECT AIR KNIVES

DESCRIPTION OF THE COANDA EFFECT

The air amplifiers and the air knives exploit the Coanda effect.

This phenomenon can be explained as the tendency of a fluid to follow the contour of a surface nearby. It is named after the pioner of aerodynamics Henri Coanda, who in 1936 patented some instruments that exploited the capacity to deviate a flow.

The compressed air introduced in an amplifier or in an air knife is forced to pass through a reduced section, from 0.02 mm to 0.08 mm, and, by lapping the surface nearby, the surrounding air is attracted towards the flow's direction, so that the volume of air becomes from 5 to 20 times bigger than it was at the inlet.

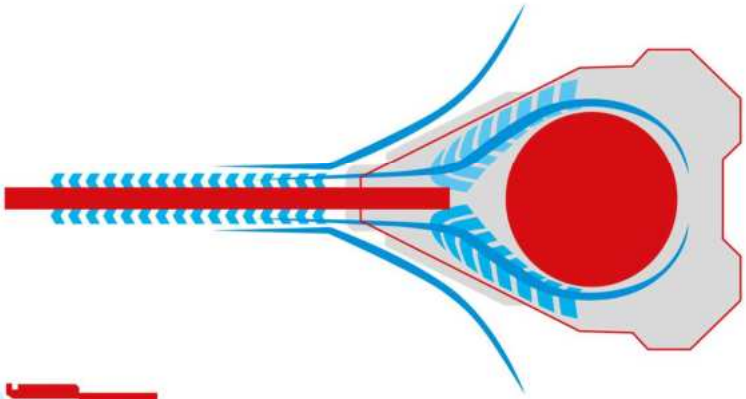

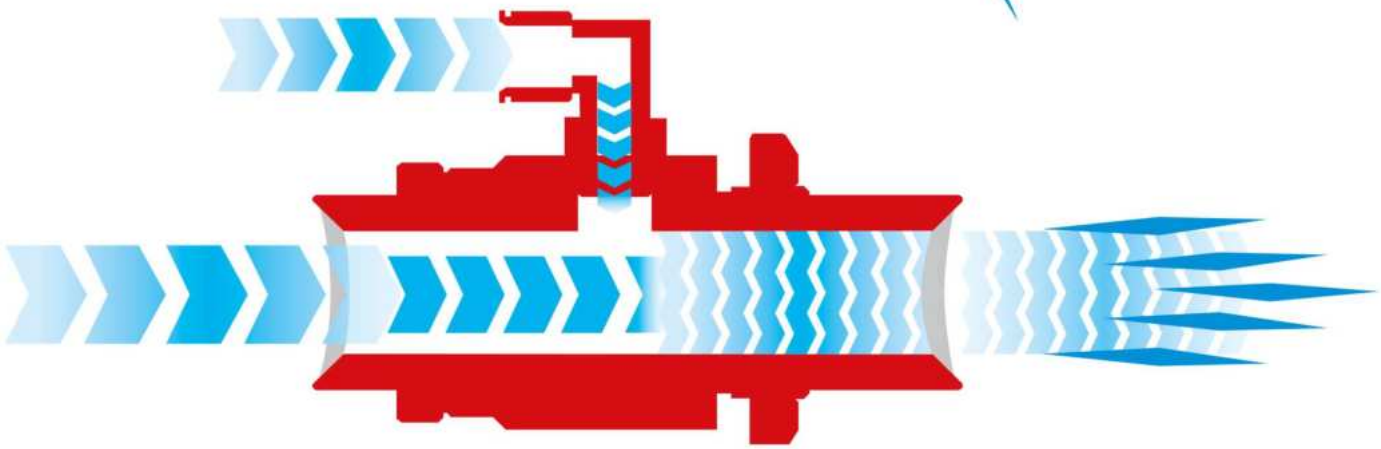

SERIES ABT-030

DOUBLE-SLOT AIR KNIVES

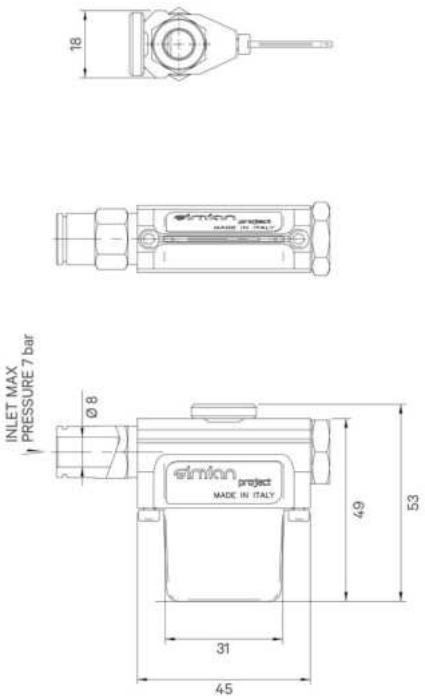

GENERAL FEATURES - **ABT-030**	
Materials	Anodized aluminium and AISI304 s.s.
Air supply port	Fitting Ø-8
Fixation	Optional angular bracket
Blade length	32 mm
Air supply pressure	1-7 bar
Optional magnetic support	KACM-ABT030
Weight	110 g

PERFORMANCES AND CONSUMPTION TABLE

Pressure bar	Consumption Nl/min	Thrust a 200 mm in g	Noise level dBA
1	150	97	70
2	255	213	76
3	346	330	79
4	433	450	82
5	516	590	84
6	599	720	85
7	666	850	86

SERIES ABT-030 PLUS

DOUBLE-SLOT AIR KNIVES

GENERAL FEATURES - ABT-030 PLUS	
Materials	Anodized aluminium and AISI304 s.s.
Air supply port	Fitting Ø-10
Fixation	Optional angular bracket
Blade length	32 mm
Air supply pressure	1-7 bar
Optional magnetic support	KACM-ABT030
Weight	130 g

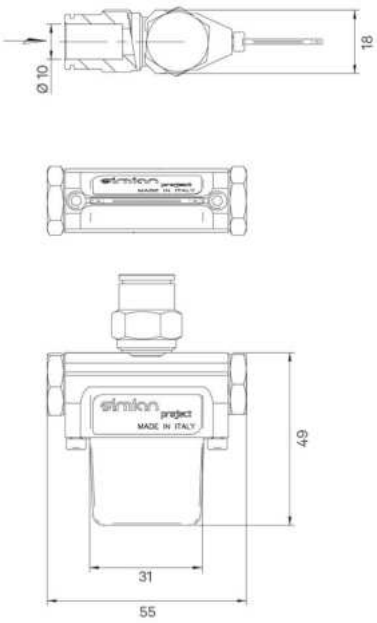

PERFORMANCES AND CONSUMPTION TABLE

Pressure bar	Consumption Nl/min	Thrust a 200 mm in g	Noise level dBA
1	166	120	70
2	266	230	76
3	366	360	78
4	458	500	81
5	549	640	82,5
6	633	780	84
7	716	940	86

PRIMAIRO
Primairo GmbH
Nobelstraße 3
41189 Mönchengladbach
Deutschland
T +49 2166 989 75 00
F +49 2166 989 75 09
info@primairo.de
www.primairo.de

SERIES ABT-060
DOUBLE-SLOT AIR KNIVES

GENERAL FEATURES - ABT-060	
Materials	Anodized aluminium and AISI304 s.s..
Air supply port	Fitting Ø-10
Fixation	Optional angular bracket
Blade length	76 mm
Air supply pressure	1-7 bar
Optional magnetic support	KACM-ABT030
Weight	170 g

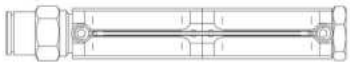

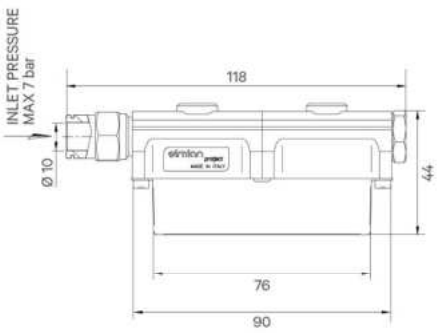

PERFORMANCES AND CONSUMPTION TABLE

Pressure bar	Consumption Nl/min	Thrust a 200 mm in g	Noise level dBA
1	283	170	72
2	449	340	77
3	629	570	80
4	816	810	83
5	982	1090	85
6	1166	1400	86
7	1350	1700	87

PRIMAIRO
Primairo GmbH
Nobelstraße 3
41189 Mönchengladbach
Deutschland
T +49 2166 989 75 00
F +49 2166 989 75 09
info@primairo.de
www.primairo.de

SERIES ABT-100

DOUBLE-SLOT AIR KNIVES

GENERAL FEATURES - **ABT-100**	
Materials	Anodized aluminium and AISI304 s.s.
Air supply port	Fitting Ø-10
Fixation	Integrated feet
Blade length	100 mm
Air supply pressure	1-7 bar
Optional magnetic support	KACM-ABT100
Weight	200 g

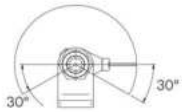

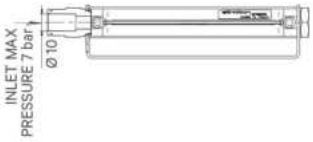

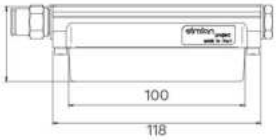

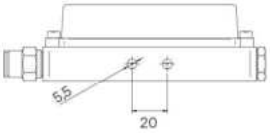

PERFORMANCES AND CONSUMPTION TABLE

Pressure bar	Consumption Nl/min	Thrust a 200 mm in g	Noise level dBA
1	366	216	75
2	558	450	79
3	724	690	82
4	899	930	84
5	1082	1210	85
6	1233	1530	87
7	1410	1800	88

PRIMAIRO
Primairo GmbH
Nobelstraße 3
41189 Mönchengladbach
Deutschland
T +49 2166 989 75 00
F +49 2166 989 75 09
info@primairo.de
www.primairo.de

SERIES ABT-240

DOUBLE-SLOT AIR KNIVES

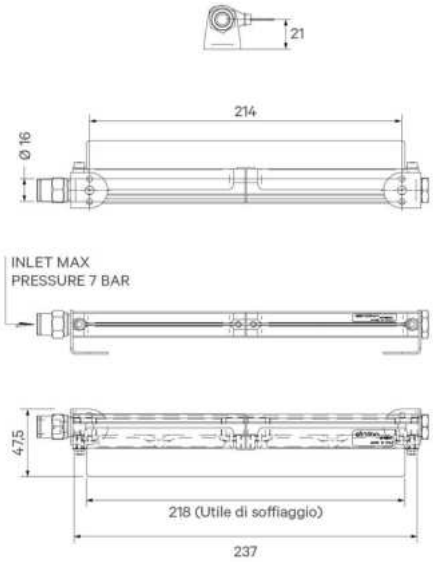

GENERAL FEATURES - ABT-240	
Materials	Anodized aluminium and AISI304 s.s.
Air supply port	Fitting Ø 10
Fixation	Integrated feet
Flow width	218 mm
Supply pressure	1-7 bar
Optional magnetic support	KACM-ABT100
Weight	300 g

PERFORMANCES AND CONSUMPTION TABLE

Pressure bar	Consumption Nl/min	Thrust a 200 mm in g	Noise level dBA
1	283	190	72
2	449	350	77
3	629	515	80
4	816	730	83
5	982	990	85
6	1166	1260	86

SERIES ABT-400

DOUBLE-SLOT AIR KNIVES

GENERAL FEATURES - **ABT-400**	
Materials	Anodized aluminium and AISI304 s.s.
Air supply port	Fitting Ø 10
Fixation	Integrated feet
Flow width	362 mm
Supply pressure	7 bar
Optional magnetic support	KACM-ABT200
Weight	450 g

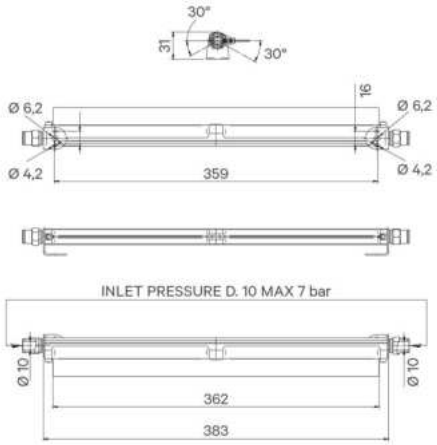

PERFORMANCES AND CONSUMPTION TABLE

Pressure bar	Consumption Nl/min
1	1530
2	1956
3	2720
4	3146
5	3910
6	4760
7	5326

PRIMAIRO
Primairo GmbH
Nobelstraße 3
41189 Mönchengladbach
Deutschland
T +49 2166 989 75 00
F +49 2166 989 75 09
info@primairo.de
www.primairo.de

SERIES ABT-600

DOUBLE-SLOT AIR KNIVES

GENERAL FEATURES - **ABT-600**	
Materials	Anodized aluminium and AISI304 s.s.
Air supply port	Fitting Ø 10
Fixation	Integrated feet
Flow width	554 mm
Supply pressure	max 7 bar
Optional magnetic support	KACM-ABT200
Weight	690 g

PERFORMANCES AND CONSUMPTION TABLE

Pressure bar	Consumption Nl/min
1	2295
2	2934
3	4080
4	4719
5	5865
6	7140
7	7989

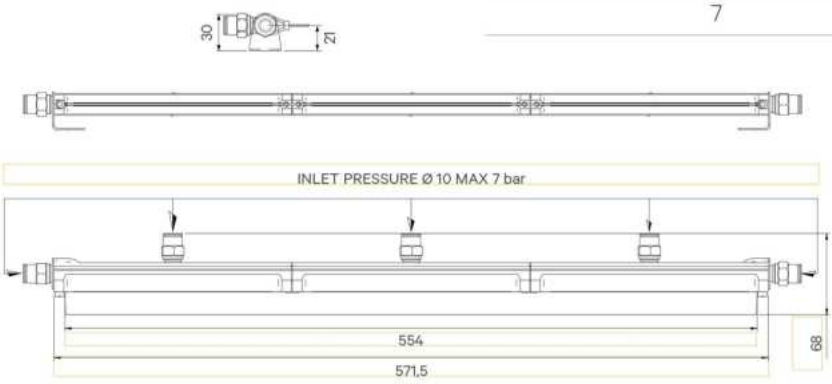

PRIMAIRO
Primairo GmbH
Nobelstraße 3
41189 Mönchengladbach
Deutschland
T +49 2166 989 75 00
F +49 2166 989 75 09
info@primairo.de
www.primairo.de

SERIES ABT-800

DOUBLE-SLOT AIR KNIVES

GENERAL FEATURES - **ABT-800**	
Materials	Anodized aluminium and AISI304 s.s.
Air supply port	Fitting Ø 10
Fixation	Integrated feet
Flow width	745 mm
Supply pressure	max 7 bar
Optional magnetic support	KACM-ABT200
Weight	900 g

PERFORMANCES AND CONSUMPTION TABLE

Pressure bar	Consumption Nl/min
1	2295
2	2934
3	4080
4	4719
5	5865
6	7140
7	7989

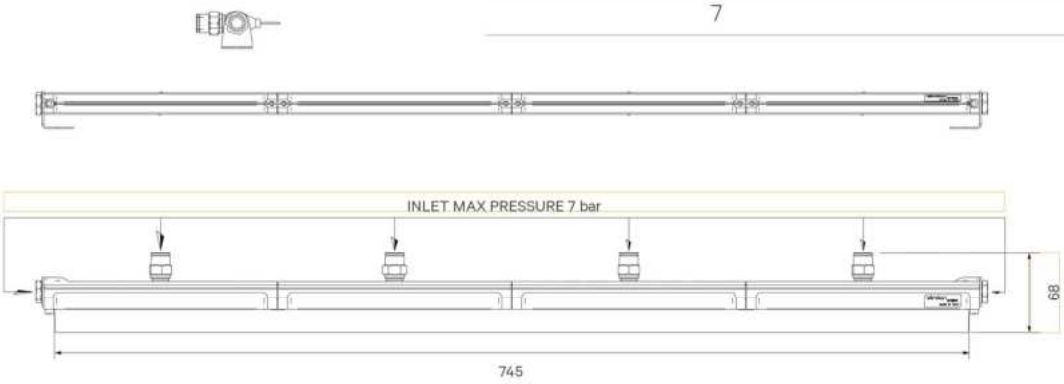

PRIMAIRO
Primairo GmbH
Nobelstraße 3
41189 Mönchengladbach
Deutschland
T +49 2166 989 75 00
F +49 2166 989 75 09
info@primairo.de
www.primairo.de

ACCESSORIES AND SPECIAL VERSIONS

AIR KNIVES

ABT 200
WITH CONCAVE AND CONVEX LIP

ABT 030 PLUS
WITH SHAPED LIP

ABT 030 PLUS
WITH TUBE FOR CONNECTION
TO MACHINE TOOL

MAGNETIC SUPPORT	
PART-NUMBER	AIR KNIFE
KACM-ABT030	ABT-030 / ABT-060
KACM-ABT100	ABT-100
KACM-ABT200	ABT-200 / ABT-240 / ABT-400 / ABT-600 / ABT-800

FIXATION BRACKET	
PART-NUMBER	AIR KNIFE
ABT-05	ABT-030 / ABT-060

CUSTOMISED VERSIONS

On request we can supply versions customised in shape and/or material.

SERIES ABT-F1C

CALIBRATED SINGLE-SLOT AIR KNIVES

ABT 030 PLUS
WITH CURVED LIP

GENERAL FEATURES - **ABT-F1C**	
Materials	Aluminium and Delrin
Air supply port	Fitting Ø 10
Fixation	Integrated feet
Flow width	From 150 mm to 1200 mm
Supply pressure	max 7 bar
Noise level for every 200 mm length	Range from 62 to 82 dBA
Optional magnetic kit	KACM-ABT200

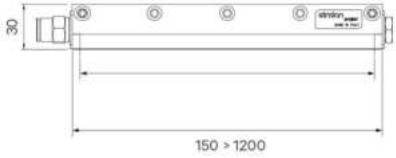

PERFORMANCE AND CONSUMPTION TABLE (For length 100 mm)

Pressure bar	Consumption Nl/min	Thrust force at 150 mm, in g
1	109	61
2	195	135
3	279	220
4	341	310
5	416	400
6	483	520
7	566	635

PRIMAIRO
Primairo GmbH
Nobelstraße 3
41189 Mönchengladbach
Deutschland
T +49 2166 989 75 00
F +49 2166 989 75 09
info@primairo.de
www.primairo.de

SERIES ABX-1000

LONG AIR KNIVES SUPPLIED BY AIR AMPLIFIER

GENERAL FEATURES - **ABX-1000**	
Materials	Anodised aluminium / Stainless steel
Fixation	On request
Flow width	1000 mm
Supply pressure	Based on the type of air supply

On request: supply connection at 90°.

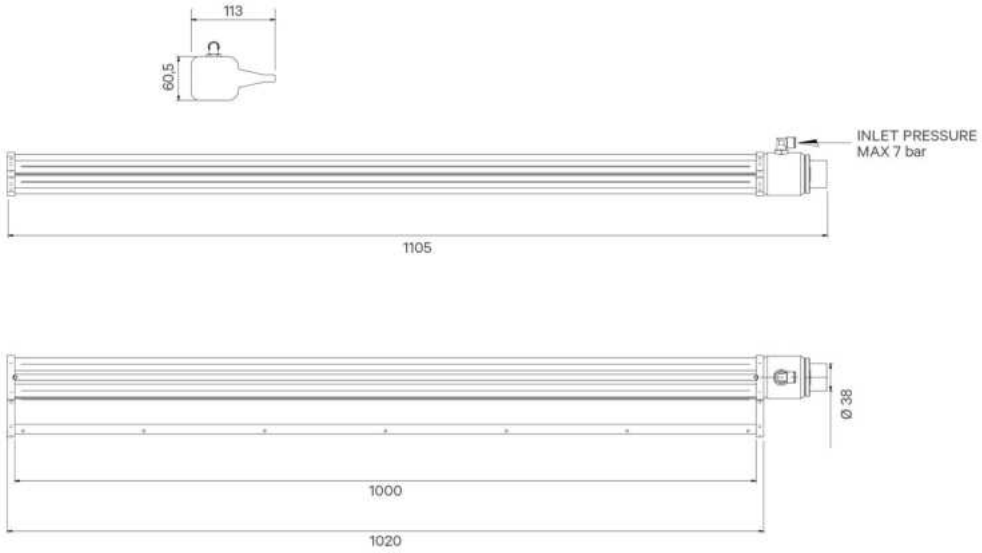

PRIMAIRO
Primairo GmbH
Nobelstraße 3
41189 Mönchengladbach
Deutschland
T +49 2166 989 75 00
F +49 2166 989 75 09
info@primairo.de
www.primairo.de

SERIES ABX-1500

LONG AIR KNIVES SUPPLIED BY AIR AMPLIFIER

GENERAL FEATURES - **ABX-1500**	
Materials	Anodised aluminium / Stainless steel
Fixation	On request
Flow width	1500 mm
Supply pressure	Based on the type of air supply

On request: supply connection at 90°.

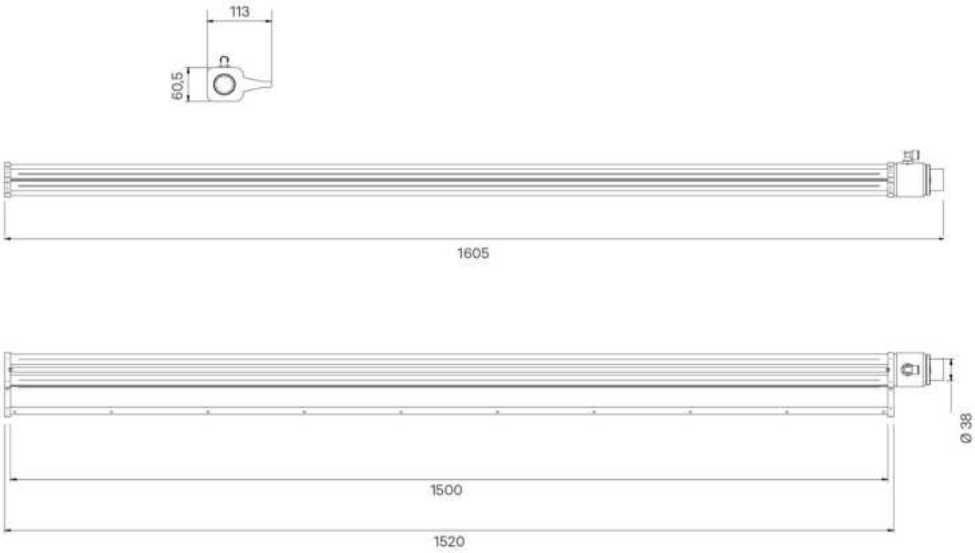

PRIMAIRO
Primairo GmbH
Nobelstraße 3
41189 Mönchengladbach
Deutschland
T +49 2166 989 75 00
F +49 2166 989 75 09
info@primairo.de
www.primairo.de

SERIES ABX-2000

LONG AIR KNIVES SUPPLIED BY AIR AMPLIFIER

GENERAL FEATURES - **ABX-2000**	
Materials	Anodised aluminium / Stainless steel
Fixation	On request
Flow width	2000 mm
Supply pressure	Based on the type of air supply

On request: supply connection at 90°.

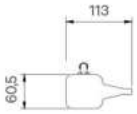

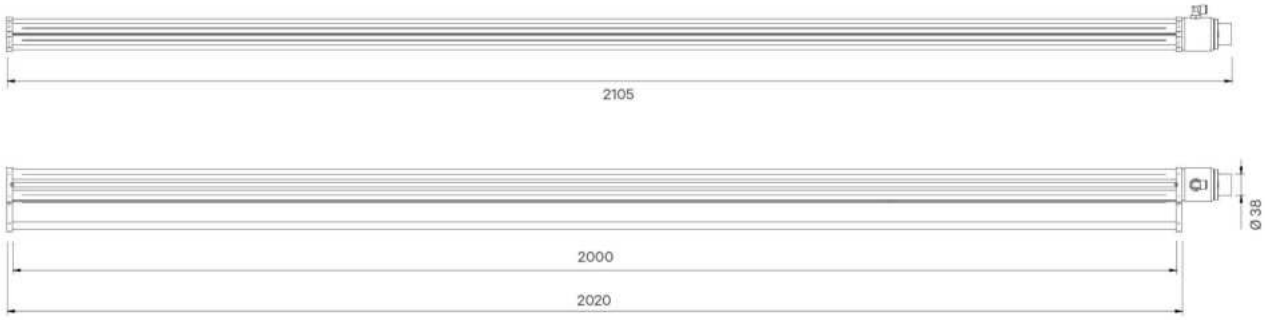

PRIMAIRO
Primairo GmbH
Nobelstraße 3
41189 Mönchengladbach
Deutschland
T +49 2166 989 75 00
F +49 2166 989 75 09
info@primairo.de
www.primairo.de